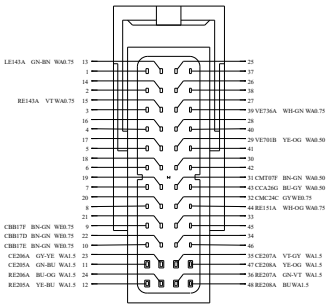

7V6N-14A464-GA
C1E104-C
TO PCM MODULE DIESEL DV4
HARNESS 12A522

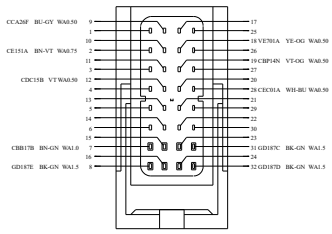

7V6N-14A464-JA
C1E104-C
TO PCM MODULE DIESEL DV6
HARNESS 14K012

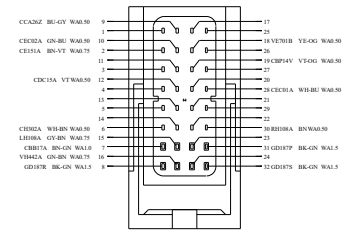

7V6N-14A464-JA
C1E104-C
TO PCM MODULE DIESEL DV6
HARNESS 14K012

PIN 22 => CMC24C GY 0.75 WE
PIN 21 => CMT07G BN-GN 0.50 WA
PIN 2 => LH108B GY-BN 0.75 WA
PIN 10 => CEC02A GN-BU 0.50 WA

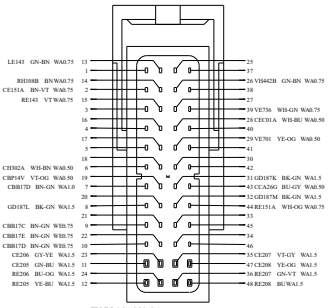

7V6N-14A464-GA
C1E104-C
TO PCM MODULE DIESEL DV4
HARNESS 12A522

PIN 8 => CBB16J BU-GN 1.5 WA
PIN 15 => RE143A VT 0.75 WA
PIN 7 => CBB16L BU-GN 1.5 WA
PIN 12 => RE205A YE-BU 1.5 WA
PIN 23 => CE206A GY-YE 1.5 WA
PIN 24 => RE206A BU-OG 1.5 WA
PIN 11 => CE205 GN-BU 1.5 WA
PIN 21 => CMT07G BN-GN 0.50 WA
PIN 9 => CBB17F BN-GN 0.75 WE
PIN 11 => RE143A VT 0.50 WK
PIN 18 => VE700A BN-BU 0.50 WK
PIN 10 => RE144A BN 0.50 WE
PIN 19 => VE707A GN-VT 0.50 WE
PIN 2 => LE144A YE-VT 0.50 WE
PIN 22 => CMC24C GY 0.75 WE
PIN 28 => VDB04P WH-BU 0.50 WK
PIN 9 => CCA26Z BU-GY 0.50 WA
PIN 31 => GD187P BK-GN 1.5 WA
PIN 32 => GD187S BK-GN 1.5 WA
PIN 7 => CBB17A BN-GN 1.0 WA
PIN 8 => GD187R BK-GN 1.5 WA
PIN 29 => VE701C YE-OG 0.50 WA
PIN 20 => VE707C GN-VT 0.75 WA
PIN 24 => RE206 BU-OG 1.5 WA
PIN 23 => CE206 GY-YE 1.5 WA
PIN 12 => RE205 YE-BU 1.5 WA
PIN 11 => CE205 GN-BU 1.5 WA
PIN 13 => LE143 GN-BN 0.75 WA
PIN 15 => RE143 VT 0.75 WA
PIN 31 => CMT07G BN-GN 0.50 WA
PIN 2 => LE144A YE-BN 0.75 WA
PIN => A_CDC12A YE 0.75 WK

PIN 31 => GD187K BK-GN 1.5 WK
PIN 18 => VE701B YE-OG 0.50 WA
PIN 19 => CBP14V VT-OG 0.50 WA
PIN 9 => CCA26Y BU-GY 0.50 WA
PIN 30 => RH108A BN 0.50 WA
PIN 16 => VH442A GN-BN 0.75 WA
PIN 17 => VH442B GN-BN 0.75 WA
PIN 12 => CDC15A VT 0.50 WA
PIN 8 => GD187L BK-GN 1.5 WA
PIN 32 => GD187M BK-GN 1.5 WA
PIN 30 => B_CDC12A YE 0.75 WK
PIN 19 => LE143A GN-BN 0.75 WE
PIN 32 => CE123A BU-BN 1.5 WK
PIN 24 => CE123B YE-GY 1.5 WK
PIN 7 => CBB16E BU-GN 1.5 WA
PIN 8 => CBB16G BU-GN 1.5 WA
PIN 17 => RE143A VT 0.75 WE
PIN 28 => VDB04P WH-BU 0.50 WA
PIN 23 => VDB05P WH 0.50 WA
PIN 31 => GD187K BK-GN 1.5 WA
PIN 23 => GD187D BK-GN 1.5 WA
PIN 23 => GD187E BK-GN 1.5 WK
PIN 31 => GD187H BK-GN 1.5 WE
PIN 11 => CE205 GN-BU 1.5 WA
PIN 10 => CBB17E BN-GN 0.75 WE
PIN 22 => CBB17E BN-GN 0.75 WE
PIN 10 => CEC02A GN-BU 0.50 WA
PIN 7 => CBB17D BN-GN 1.0 WA

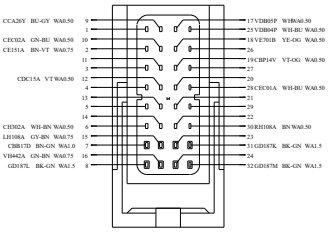

7V6N-14A464-JA
C1E104-C
TO PCM MODULE DIESEL DV6
HARNESS 14K012

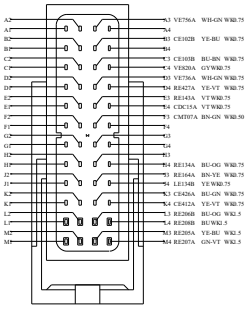

4RIQ-14A464-NA
C1E104-C
TO PCM MODULE DIESEL DV4 STAGE 5
HARNESS 12A522

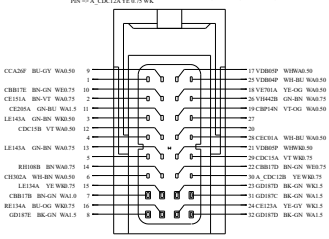

7V6N-14A464-RA
C1E104-C
TO PCM MODULE SIGMA
HARNESS 12A522

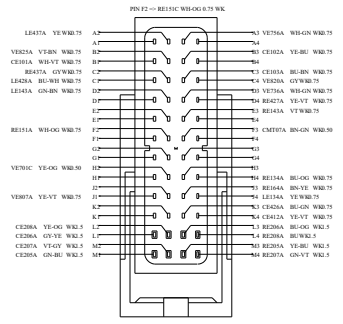

4RIQ-14A464-NA
C1E104-C
TO PCM MODULE DIESEL DV6 STAGE 5
HARNESS 12A522