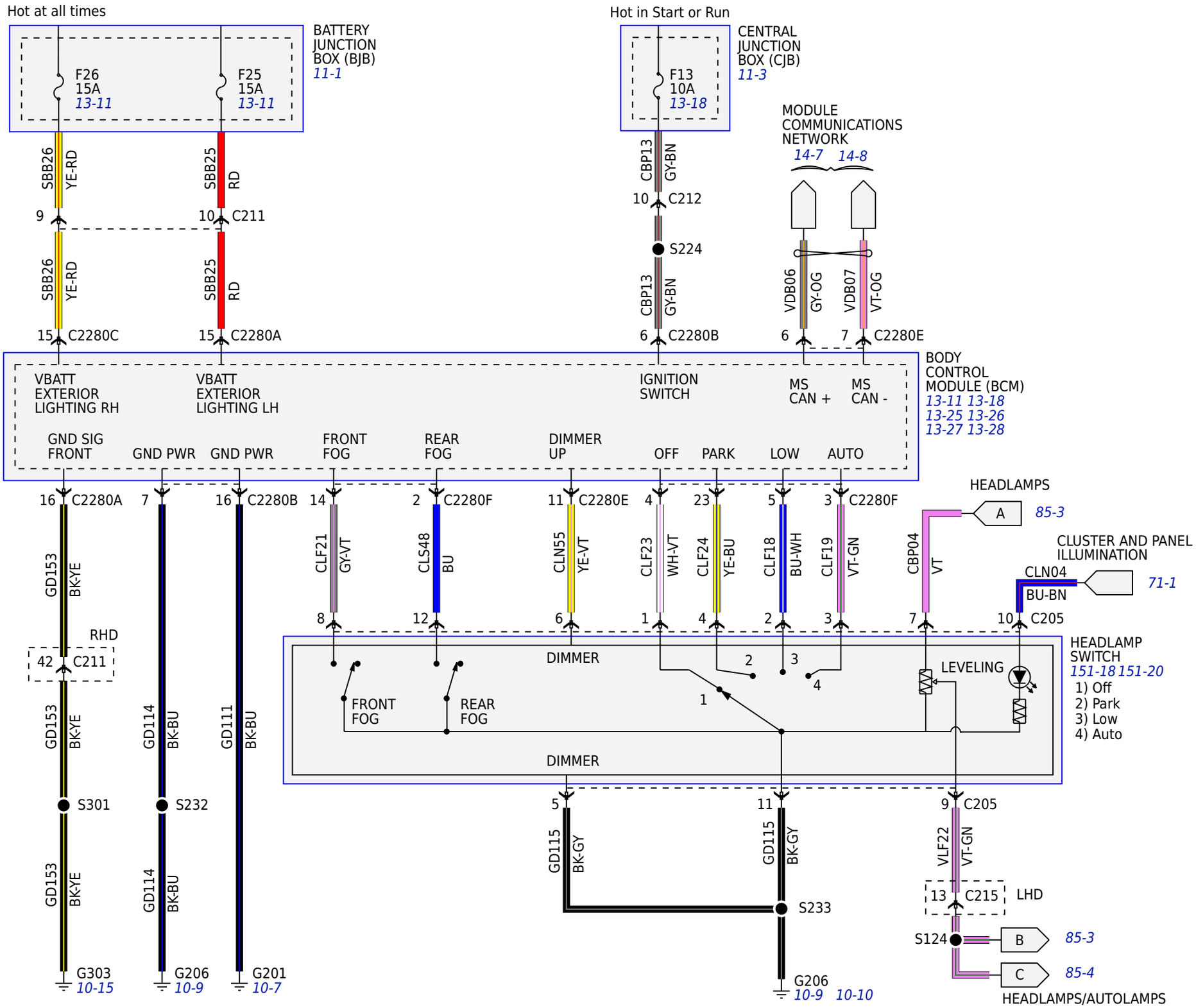
Hot at all times
BATTERY JUNCTION BOX (BJB) 11-1
F26 15A 13-11
F25 15A 13-11
Hot in Start or Run
CENTRAL JUNCTION BOX (CJB) 11-3
F13 10A 13-18
MODULE COMMUNICATIONS NETWORK 14-7 14-8
SBB26 YE-RD
SBB25 RD
CBP13 GY-BN
9
10 C211
10 C212
S224
VDB06 GY-OG
VDB07 VT-OG
15 C2280C
15 C2280A
6 C2280B
6 7 C2280E
BODY CONTROL MODULE (BCM) 13-11 13-18 13-25 13-26 13-27 13-28
VBATT EXTERIOR LIGHTING RH
VBATT EXTERIOR LIGHTING LH
IGNITION SWITCH
MS CAN +
MS CAN -
GND SIG FRONT
GND PWR
GND PWR
FRONT FOG
REAR FOG
DIMMER UP
OFF
PARK
LOW
AUTO
16 C2280A
7
16 C2280B
14
2 C2280F
11 C2280E
4
23
5
3 C2280F
HEADLAMPS
A 85-3
CLUSTER AND PANEL ILLUMINATION
CLN04 BU-BN
71-1
GD153 BK-YE
CLF21 GY-VT
CLS48 BU
CLN55 YE-VT
CLF23 WH-VT
CLF24 YE-BU
CLF18 BU-WH
CLF19 VT-GN
CBP04 VT
8
12
6
1
4
2
3
7
10 C205
RHD
42 C211
DIMMER
FRONT FOG
REAR FOG
LEVELING
HEADLAMP SWITCH 151-18 151-20
1) Off
2) Park
3) Low
4) Auto
GD153 BK-YE
GD114 BK-BU
GD111 BK-BU
S301
S232
5
11
9 C205
GD115 BK-GY
VLF22 VT-GN
13 C215
LHD
S233
S124
B 85-3
C 85-4
HEADLAMPS/AUTOLAMPS
G303 10-15
G206 10-9
G201 10-7
G206 10-9 10-10

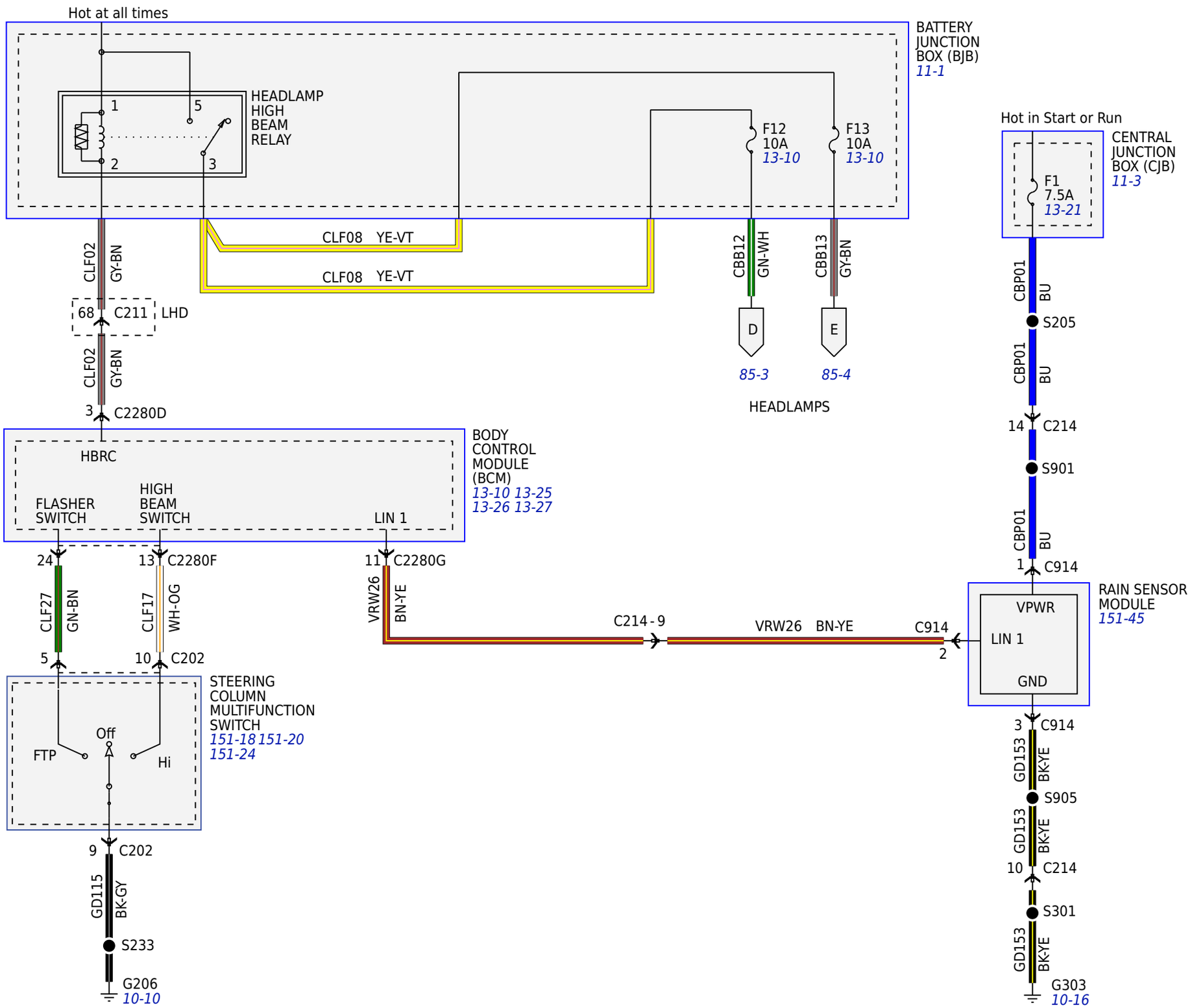
Hot at all times
BATTERY JUNCTION BOX (BJB)
11-1
HEADLAMP HIGH BEAM RELAY
1
2
3
5
F12 10A
13-10
F13 10A
13-10
CLF08 YE-VT
CLF08 YE-VT
CLF02 GY-BN
68 C211 LHD
CLF02 GY-BN
3 C2280D
CBB12 GN-WH
CBB13 GY-BN
D
E
85-3
85-4
HEADLAMPS
Hot in Start or Run
CENTRAL JUNCTION BOX (CJB)
11-3
F1 7.5A
13-21
CBP01 BU
S205
CBP01 BU
14 C214
S901
CBP01 BU
1 C914
BODY CONTROL MODULE (BCM)
13-10 13-25
13-26 13-27
HBRC
FLASHER SWITCH
HIGH BEAM SWITCH
LIN 1
24
13 C2280F
11 C2280G
CLF27 GN-BN
CLF17 WH-OG
VRW26 BN-YE
C214 - 9
VRW26 BN-YE
C914
2
RAIN SENSOR MODULE
151-45
VPWR
LIN 1
GND
5
10 C202
STEERING COLUMN MULTIFUNCTION SWITCH
151-18 151-20
151-24
Off
FTP
Hi
3 C914
GD153 BK-YE
S905
GD153 BK-YE
10 C214
S301
GD153 BK-YE
G303
10-16
9 C202
GD115 BK-GY
S233
G206
10-10

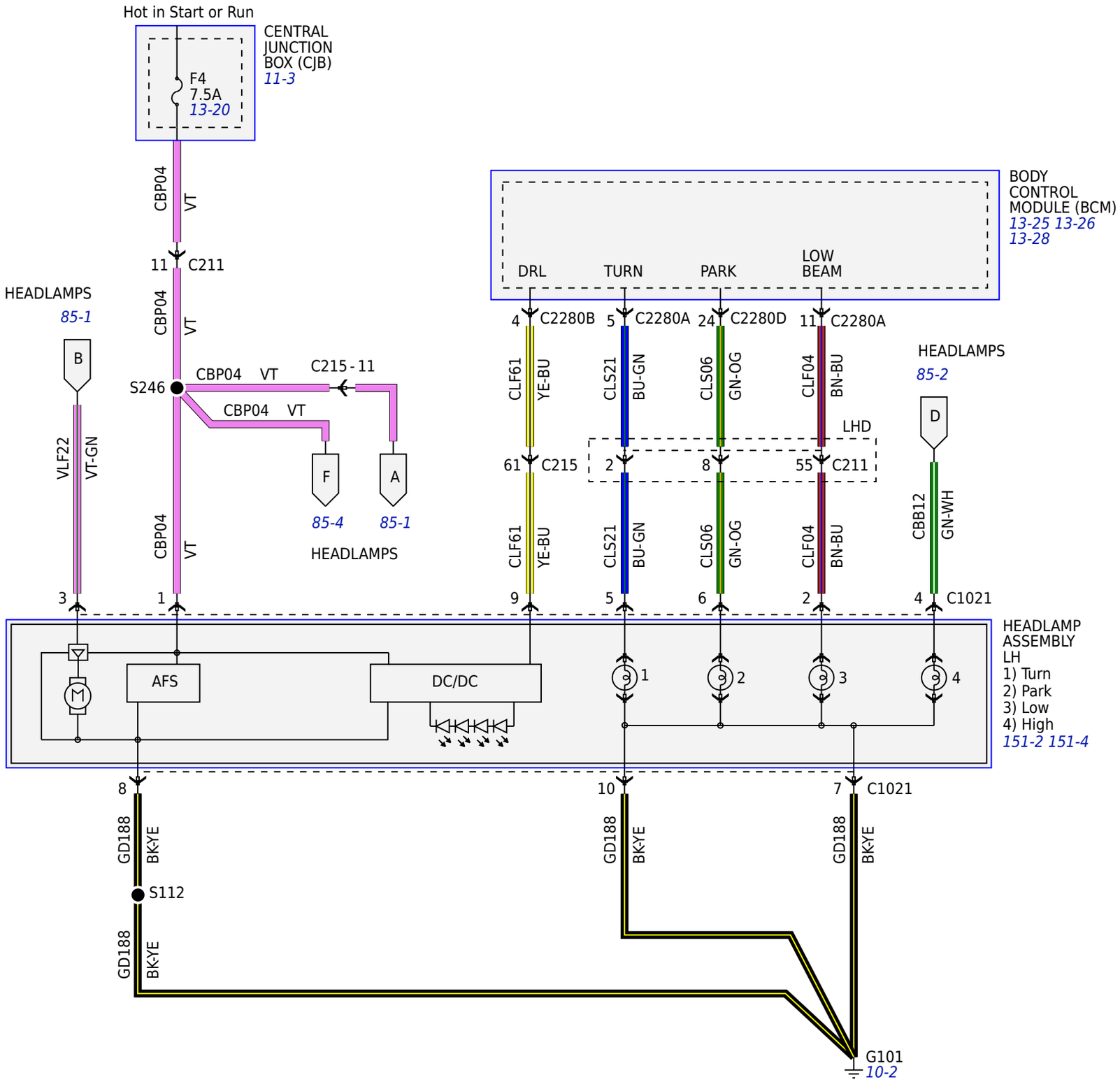
Hot in Start or Run
CENTRAL JUNCTION BOX (CJB)
11-3
F4
7.5A
13-20
CBP04 VT
11 C211
HEADLAMPS
85-1
B
VLF22 VT-GN
S246
CBP04 VT
C215 - 11
CBP04 VT
F
A
85-4
85-1
HEADLAMPS
3
1
BODY CONTROL MODULE (BCM)
13-25 13-26
13-28
DRL
TURN
PARK
LOW BEAM
4 C2280B
5 C2280A
24 C2280D
11 C2280A
CLF61 YE-BU
CLS21 BU-GN
CLS06 GN-OG
CLF04 BN-BU
LHD
61 C215
2
8
55 C211
HEADLAMPS
85-2
D
CBB12 GN-WH
9
5
6
2
4 C1021
HEADLAMP ASSEMBLY LH
1) Turn
2) Park
3) Low
4) High
151-2 151-4
AFS
DC/DC
8
10
7 C1021
GD188 BK-YE
S112
G101
10-2

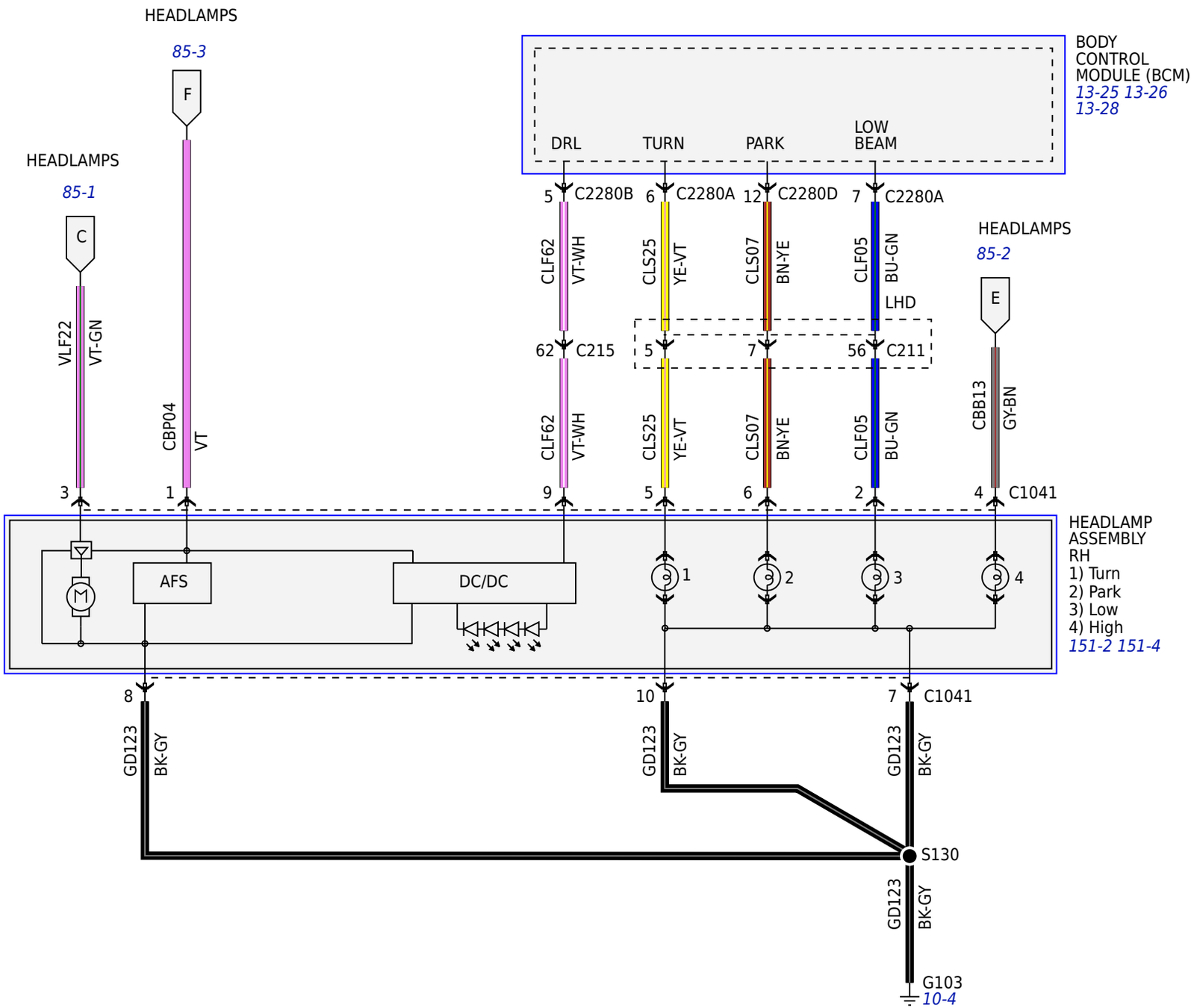
HEADLAMPS
85-3
F
HEADLAMPS
85-1
C
VLF22
VT-GN
CBP04
VT
BODY CONTROL MODULE (BCM)
13-25 13-26 13-28
DRL
TURN
PARK
LOW BEAM
5 C2280B
6 C2280A
12 C2280D
7 C2280A
CLF62
VT-WH
CLS25
YE-VT
CLS07
BN-YE
CLF05
BU-GN
LHD
62 C215
5
7
56 C211
HEADLAMPS
85-2
E
CBB13
GY-BN
3
1
9
5
6
2
4 C1041
HEADLAMP ASSEMBLY RH
1) Turn
2) Park
3) Low
4) High
151-2 151-4
AFS
DC/DC
1
2
3
4
8
10
7 C1041
GD123
BK-GY
S130
G103
10-4