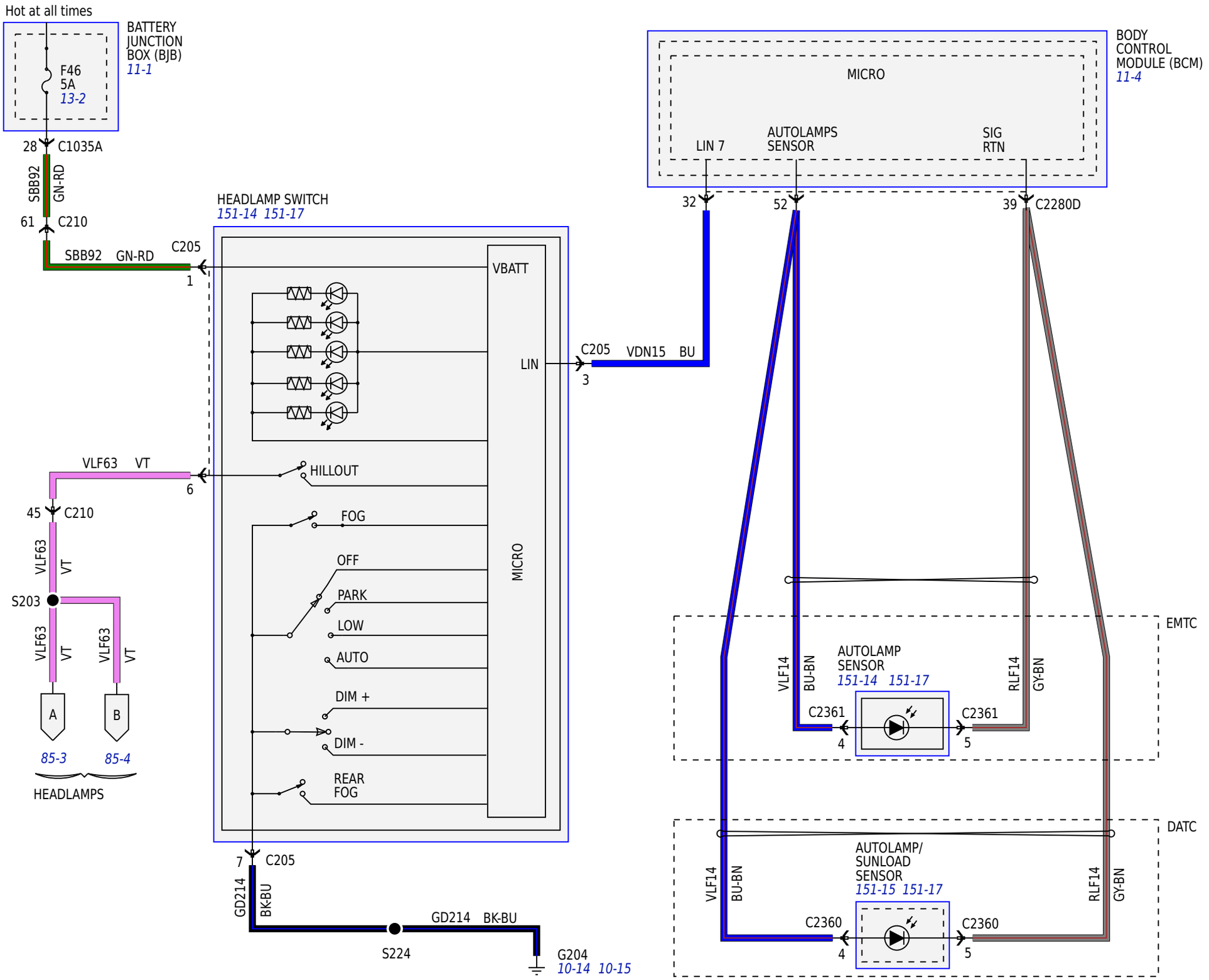
Hot at all times
BATTERY JUNCTION BOX (BJB)
11-1
F46
5A
13-2
28
C1035A
SBB92
GN-RD
61
C210
SBB92 GN-RD
C205
1
HEADLAMP SWITCH
151-14 151-17
VBATT
LIN
MICRO
HILLOUT
FOG
OFF
PARK
LOW
AUTO
DIM +
DIM -
REAR FOG
C205 VDN15 BU
3
BODY CONTROL MODULE (BCM)
11-4
MICRO
LIN 7
AUTOLAMPS SENSOR
SIG RTN
32
52
39
C2280D
VLF63 VT
6
45
C210
VLF63
VT
S203
VLF63
VT
VLF63
VT
A
B
85-3
85-4
HEADLAMPS
7
C205
GD214
BK-BU
GD214 BK-BU
S224
G204
10-14 10-15
EMTC
AUTOLAMP SENSOR
151-14 151-17
VLF14
BU-BN
RLF14
GY-BN
C2361
4
C2361
5
DATC
AUTOLAMP/ SUNLOAD SENSOR
151-15 151-17
VLF14
BU-BN
RLF14
GY-BN
C2360
4
C2360
5

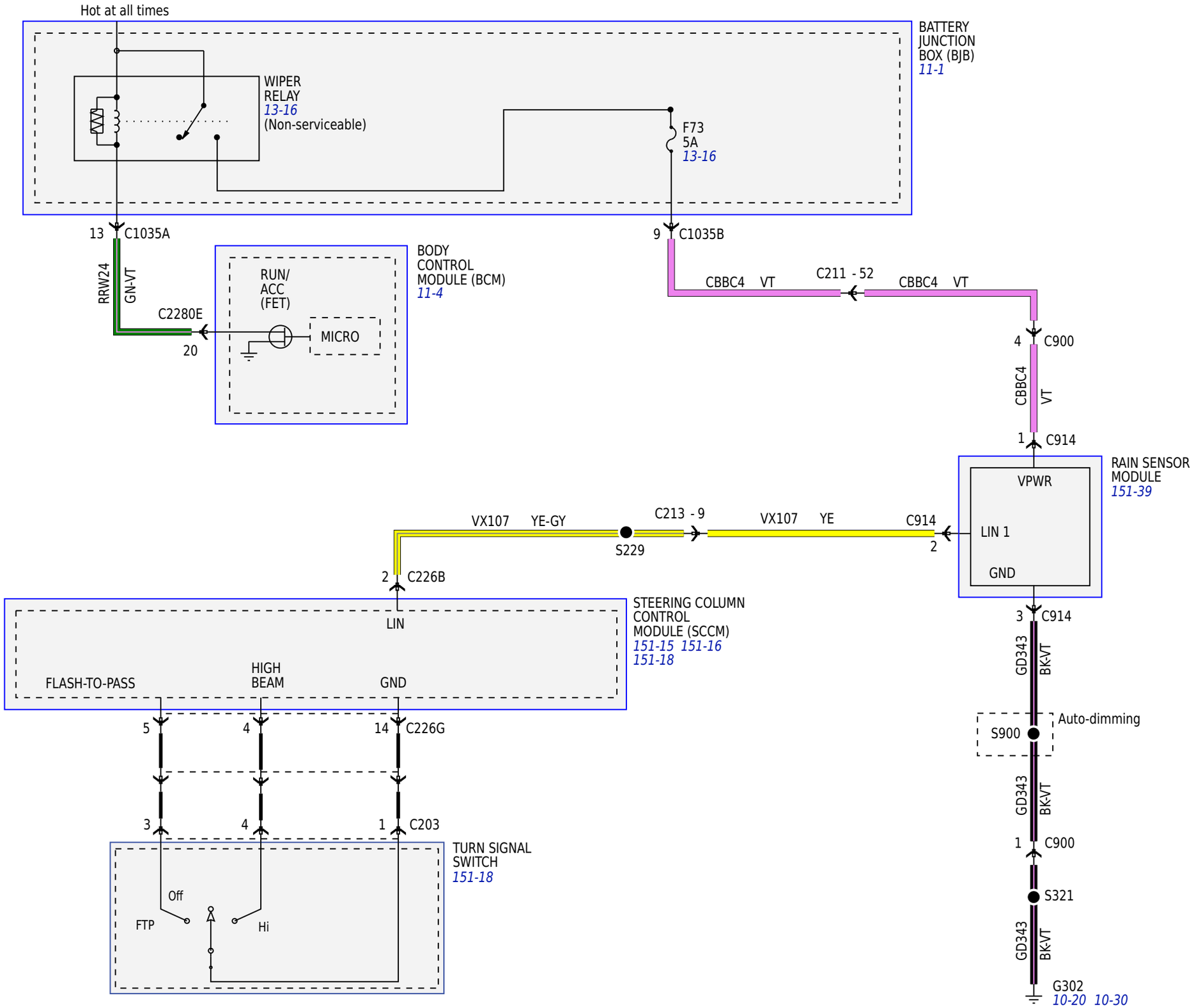
Hot at all times
BATTERY JUNCTION BOX (BJB)
11-1
WIPER RELAY
13-16
(Non-serviceable)
F73
5A
13-16
13
C1035A
9
C1035B
RRW24
GN-VT
C2280E
20
RUN/ ACC (FET)
MICRO
BODY CONTROL MODULE (BCM)
11-4
CBBC4 VT
C211 - 52
CBBC4 VT
4
C900
CBBC4
VT
1
C914
RAIN SENSOR MODULE
151-39
VPWR
LIN 1
GND
VX107 YE-GY
S229
C213 - 9
VX107 YE
C914
2
2
C226B
LIN
STEERING COLUMN CONTROL MODULE (SCCM)
151-15 151-16
151-18
FLASH-TO-PASS
HIGH BEAM
GND
5
4
14
C226G
3
4
1
C203
TURN SIGNAL SWITCH
151-18
Off
FTP
Hi
3
C914
GD343
BK-VT
S900
Auto-dimming
GD343
BK-VT
1
C900
S321
GD343
BK-VT
G302
10-20 10-30

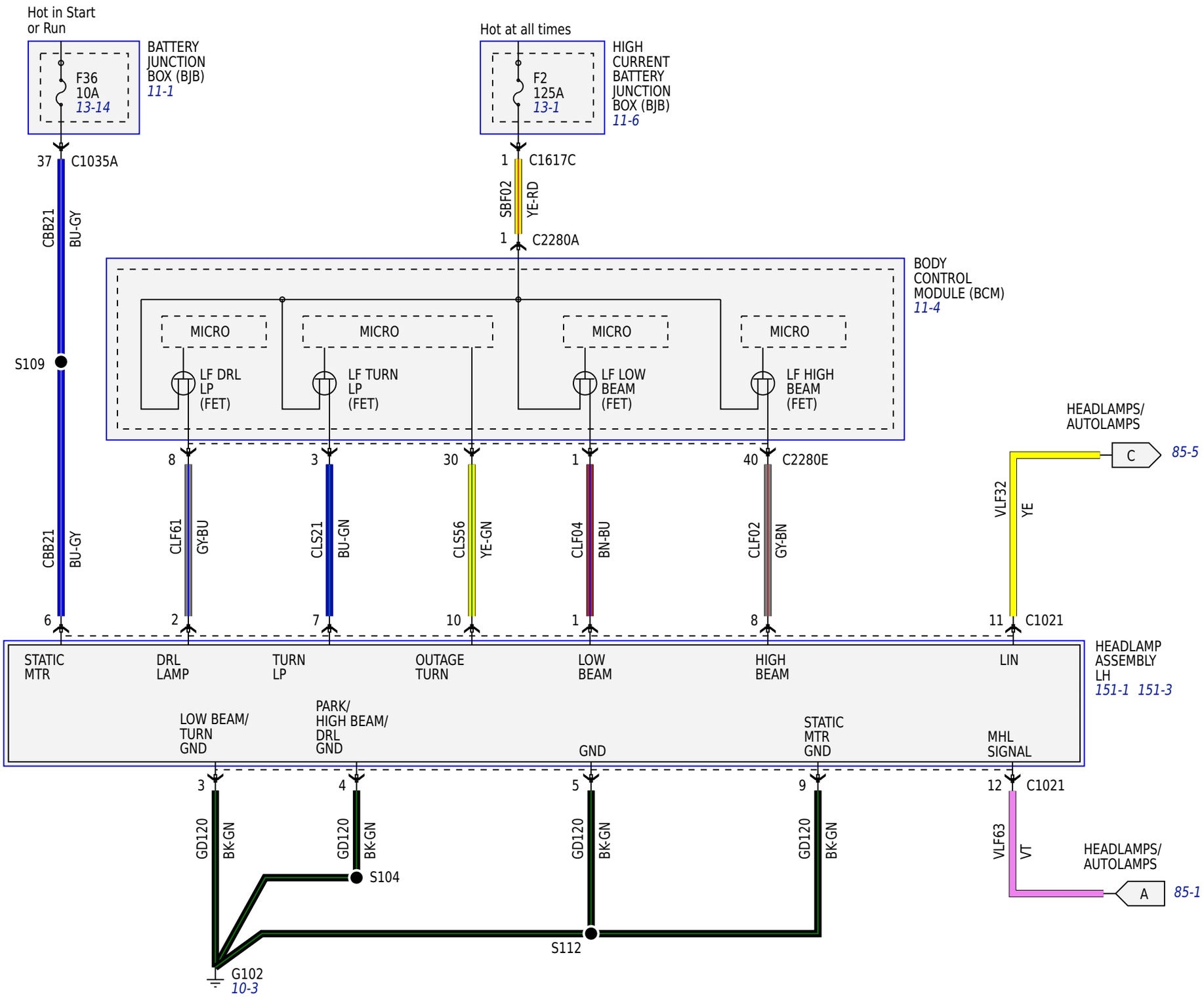
Hot in Start or Run
BATTERY JUNCTION BOX (BJB)
11-1
F36
10A
13-14
37
C1035A
CBB21
BU-GY
S109
Hot at all times
HIGH CURRENT BATTERY JUNCTION BOX (BJB)
11-6
F2
125A
13-1
1
C1617C
SBF02
YE-RD
1
C2280A
BODY CONTROL MODULE (BCM)
11-4
MICRO
MICRO
MICRO
MICRO
LF DRL LP (FET)
LF TURN LP (FET)
LF LOW BEAM (FET)
LF HIGH BEAM (FET)
8
3
30
1
40
C2280E
CLF61
GY-BU
CLS21
BU-GN
CLS56
YE-GN
CLF04
BN-BU
CLF02
GY-BN
CBB21
BU-GY
6
2
7
10
1
8
HEADLAMPS/ AUTOLAMPS
C
85-5
VLF32
YE
11
C1021
STATIC MTR
DRL LAMP
TURN LP
OUTAGE TURN
LOW BEAM
HIGH BEAM
LIN
HEADLAMP ASSEMBLY LH
151-1 151-3
LOW BEAM/ TURN GND
PARK/ HIGH BEAM/ DRL GND
GND
STATIC MTR GND
MHL SIGNAL
3
4
5
9
12
C1021
GD120
BK-GN
GD120
BK-GN
GD120
BK-GN
GD120
BK-GN
S104
S112
VLF63
VT
HEADLAMPS/ AUTOLAMPS
A
85-1
G102
10-3

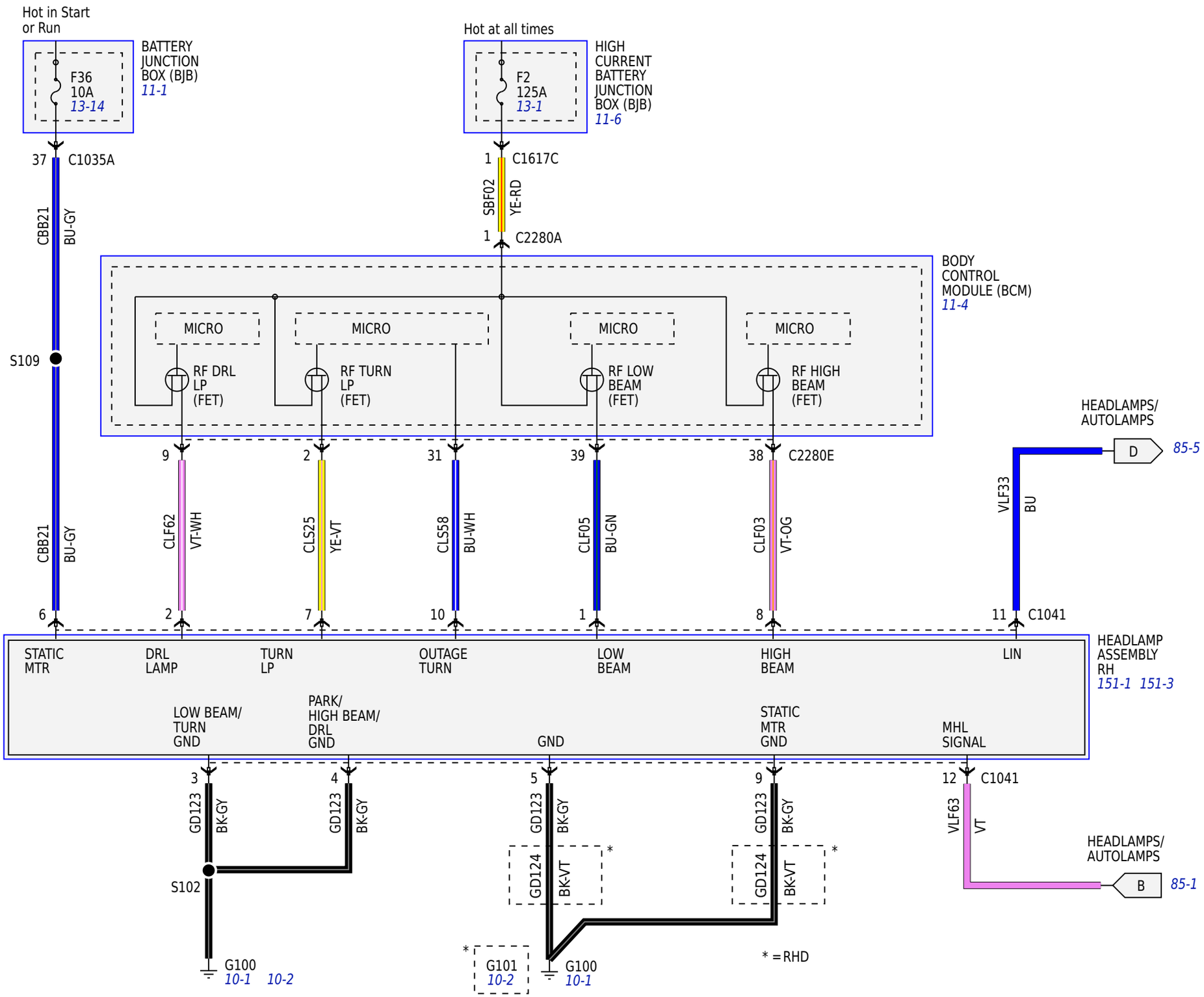
Hot in Start or Run
BATTERY JUNCTION BOX (BJB) 11-1
F36 10A 13-14
37 C1035A
CBB21 BU-GY
S109
Hot at all times
HIGH CURRENT BATTERY JUNCTION BOX (BJB) 11-6
F2 125A 13-1
1 C1617C
SBF02 YE-RD
1 C2280A
BODY CONTROL MODULE (BCM) 11-4
MICRO
RF DRL LP (FET)
RF TURN LP (FET)
RF LOW BEAM (FET)
RF HIGH BEAM (FET)
9
2
31
39
38 C2280E
CLF62 VT-WH
CLS25 YE-VT
CLS58 BU-WH
CLF05 BU-GN
CLF03 VT-OG
6
2
7
10
1
8
HEADLAMPS/ AUTOLAMPS
D 85-5
VLF33 BU
11 C1041
HEADLAMP ASSEMBLY RH 151-1 151-3
STATIC MTR
DRL LAMP
TURN LP
OUTAGE TURN
LOW BEAM
HIGH BEAM
LIN
LOW BEAM/ TURN GND
PARK/ HIGH BEAM/ DRL GND
GND
STATIC MTR GND
MHL SIGNAL
3
4
5
9
12 C1041
GD123 BK-GY
GD124 BK-VT
VLF63 VT
S102
G100 10-1 10-2
G101 10-2
G100 10-1
* = RHD
HEADLAMPS/ AUTOLAMPS
B 85-1

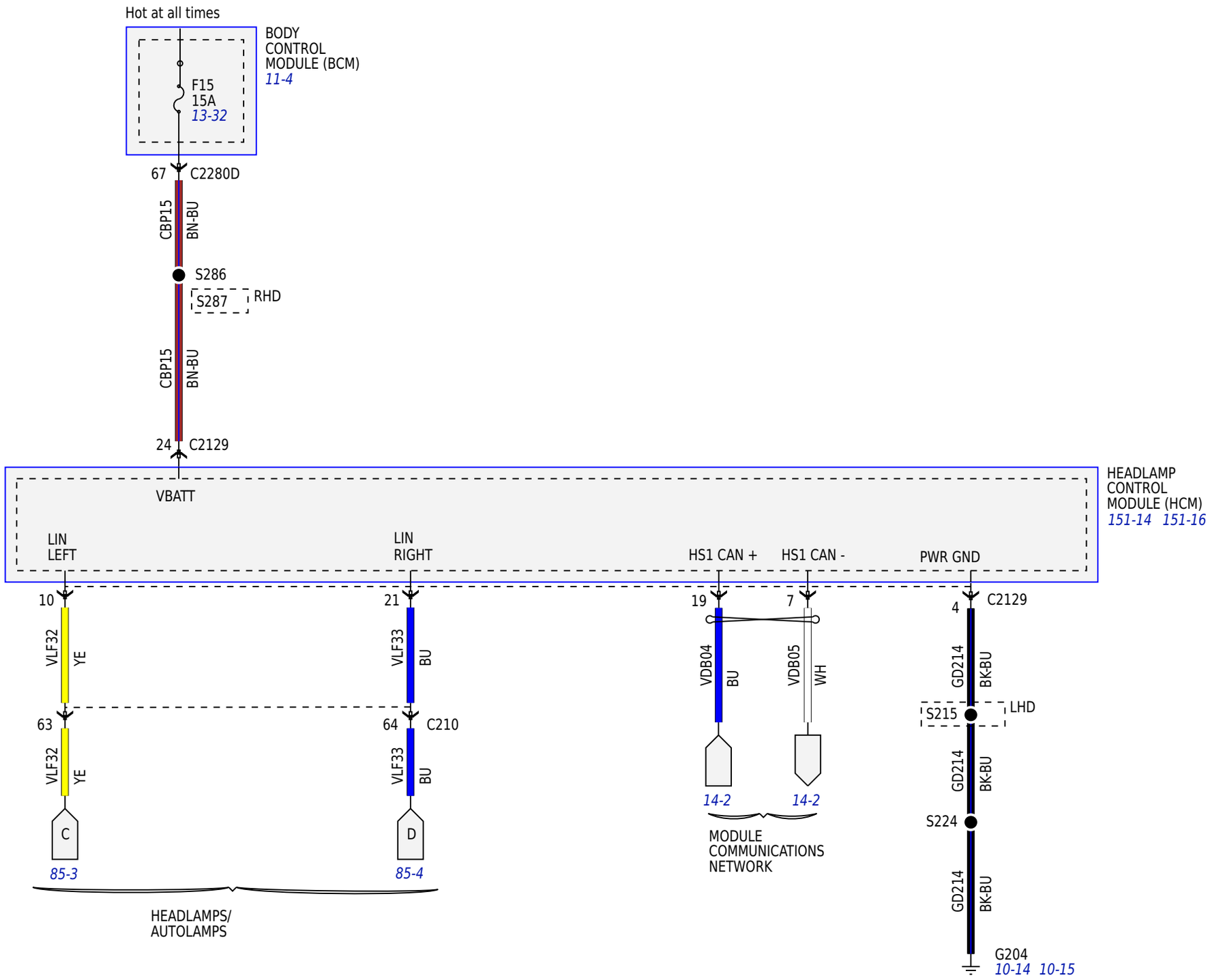
Hot at all times
BODY CONTROL MODULE (BCM)
11-4
F15
15A
13-32
67
C2280D
CBP15
BN-BU
S286
S287
RHD
CBP15
BN-BU
24
C2129
VBATT
HEADLAMP CONTROL MODULE (HCM)
151-14 151-16
LIN LEFT
LIN RIGHT
HS1 CAN +
HS1 CAN -
PWR GND
10
VLF32
YE
63
VLF32
YE
C
85-3
21
VLF33
BU
64
C210
VLF33
BU
D
85-4
HEADLAMPS/ AUTOLAMPS
19
VDB04
BU
7
VDB05
WH
14-2
14-2
MODULE COMMUNICATIONS NETWORK
4
C2129
GD214
BK-BU
S215
LHD
GD214
BK-BU
S224
GD214
BK-BU
G204
10-14 10-15

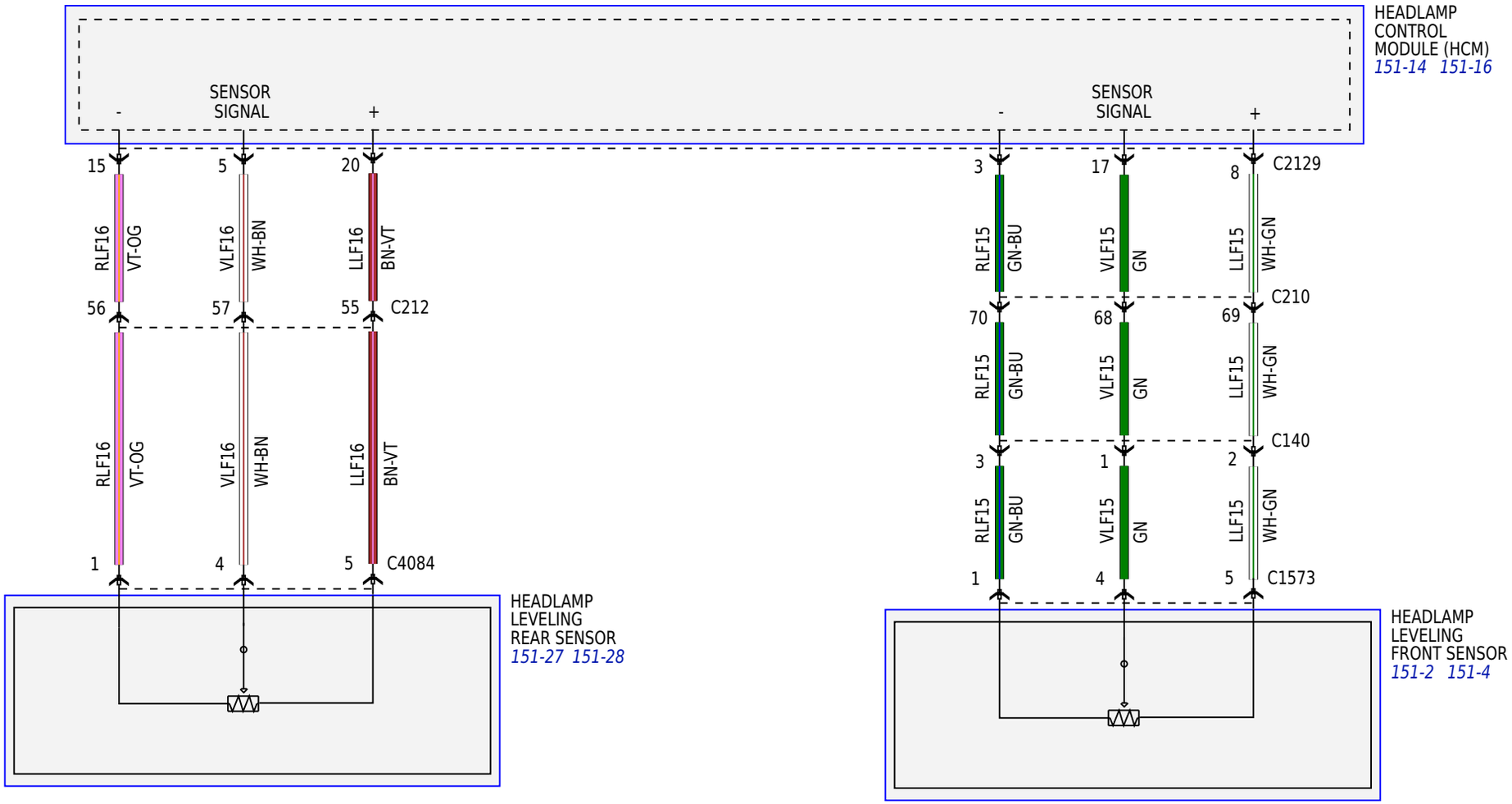
HEADLAMP CONTROL MODULE (HCM)
151-14 151-16
SENSOR SIGNAL
-
+
15
5
20
RLF16 VT-OG
VLF16 WH-BN
LLF16 BN-VT
56
57
55
C212
RLF16 VT-OG
VLF16 WH-BN
LLF16 BN-VT
1
4
5
C4084
HEADLAMP LEVELING REAR SENSOR
151-27 151-28
SENSOR SIGNAL
-
+
3
17
8
C2129
RLF15 GN-BU
VLF15 GN
LLF15 WH-GN
C210
70
68
69
RLF15 GN-BU
VLF15 GN
LLF15 WH-GN
C140
3
1
2
RLF15 GN-BU
VLF15 GN
LLF15 WH-GN
1
4
5
C1573
HEADLAMP LEVELING FRONT SENSOR
151-2 151-4