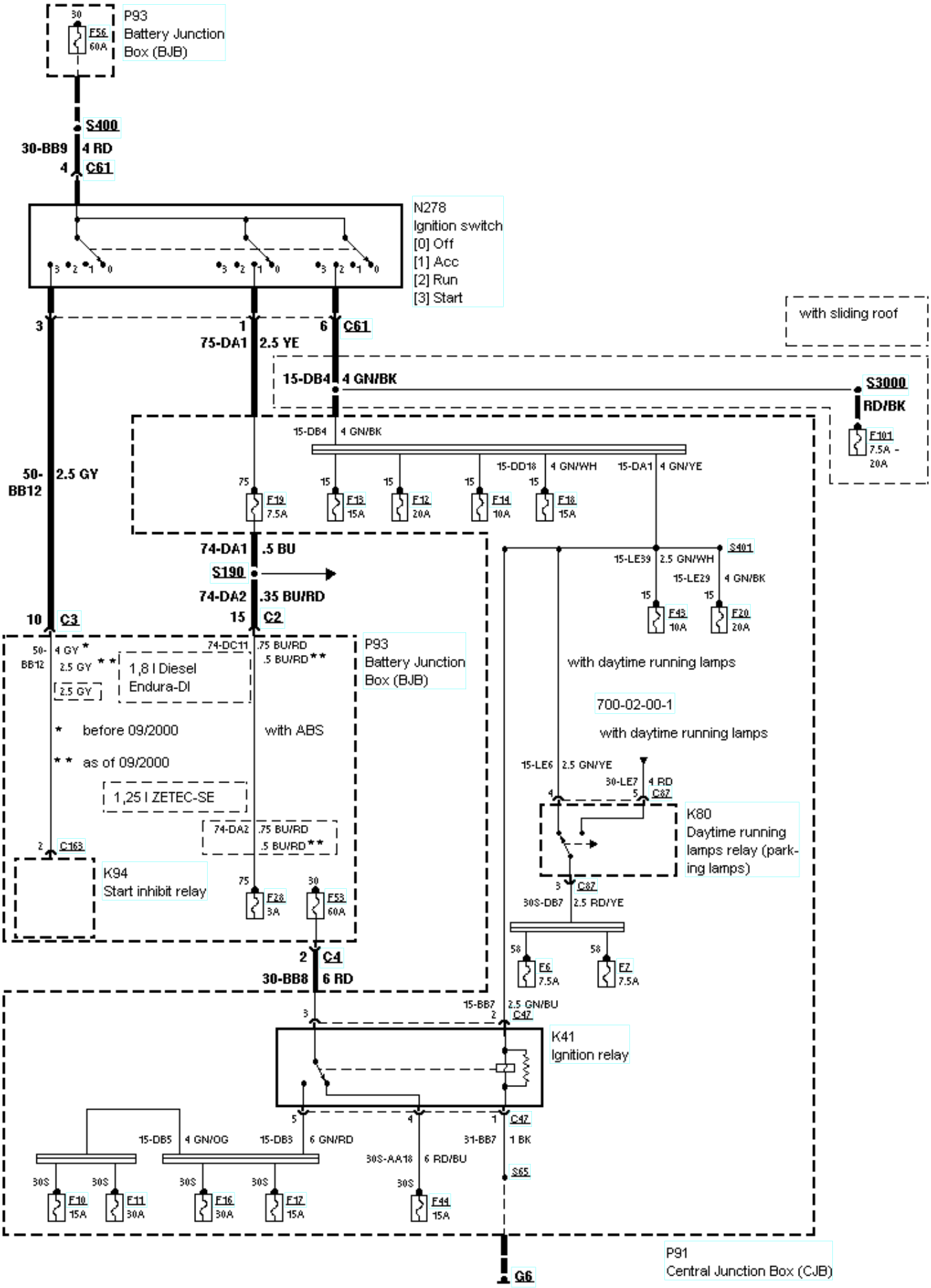
P93
Battery Junction Box (BJB)
F56
60A
S400
30-BB9
4 RD
4
C61
N278
Ignition switch
[0] Off
[1] Acc
[2] Run
[3] Start
with sliding roof
3
1
75-DA1
2.5 YE
6
C61
15-DB4
4 GN/BK
S3000
RD/BK
F101
7.5A - 20A
50-BB12
2.5 GY
15-DD18
4 GN/WH
15-DA1
4 GN/YE
F19
7.5A
F13
15A
F12
20A
F14
10A
F18
15A
74-DA1
.5 BU
S190
74-DA2
.35 BU/RD
10
C3
15
C2
S401
15-LE39
2.5 GN/WH
15-LE29
4 GN/BK
F43
10A
F20
20A
50-BB12
4 GY *
2.5 GY **
2.5 GY
1,8 l Diesel Endura-DI
74-DC11
.75 BU/RD
.5 BU/RD **
P93
Battery Junction Box (BJB)
with daytime running lamps
700-02-00-1
with daytime running lamps
* before 09/2000
** as of 09/2000
with ABS
1,25 l ZETEC-SE
74-DA2
.75 BU/RD
.5 BU/RD **
15-LE6
2.5 GN/YE
30-LE7
4 RD
C87
K80
Daytime running lamps relay (parking lamps)
C163
K94
Start inhibit relay
F28
3A
F53
60A
30S-DB7
2.5 RD/YE
F6
7.5A
F7
7.5A
2
C4
30-BB8
6 RD
15-BB7
2.5 GN/BU
C47
K41
Ignition relay
15-DB5
4 GN/OG
15-DB3
6 GN/RD
30S-AA18
6 RD/BU
31-BB7
1 BK
S65
F10
15A
F11
30A
F16
30A
F17
15A
F44
15A
G6
P91
Central Junction Box (CJB)